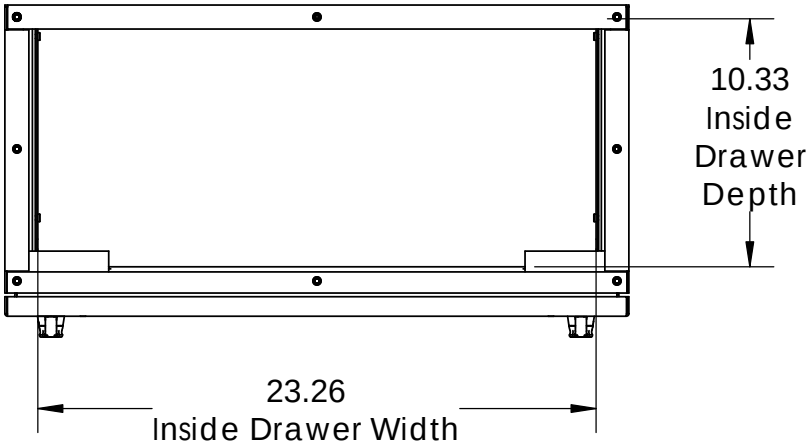
10.33
Inside
Drawer
Depth
23.26
Inside Drawer Width

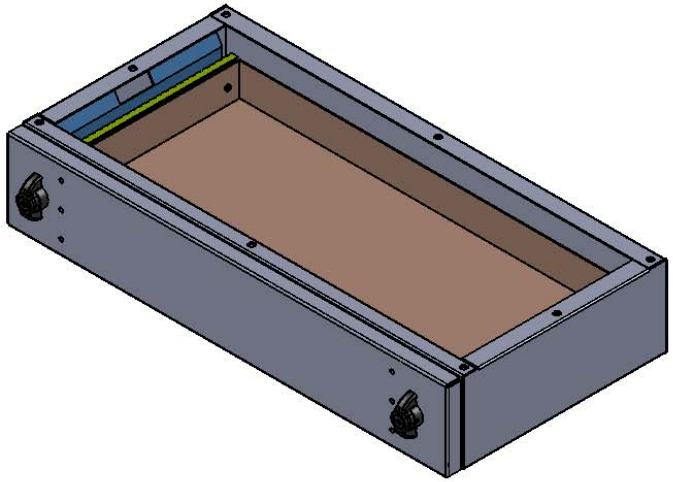

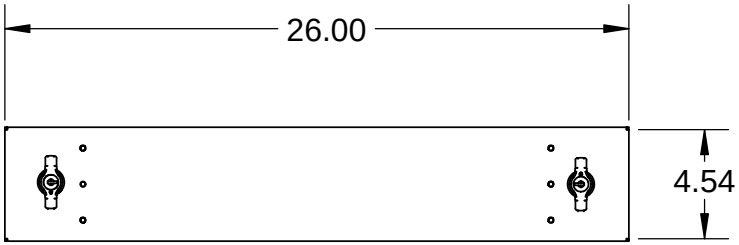
26.00
4.54

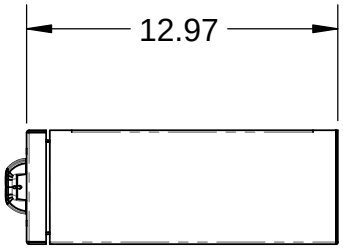
12.97