MODEL- TITAN Support Legs

DATA

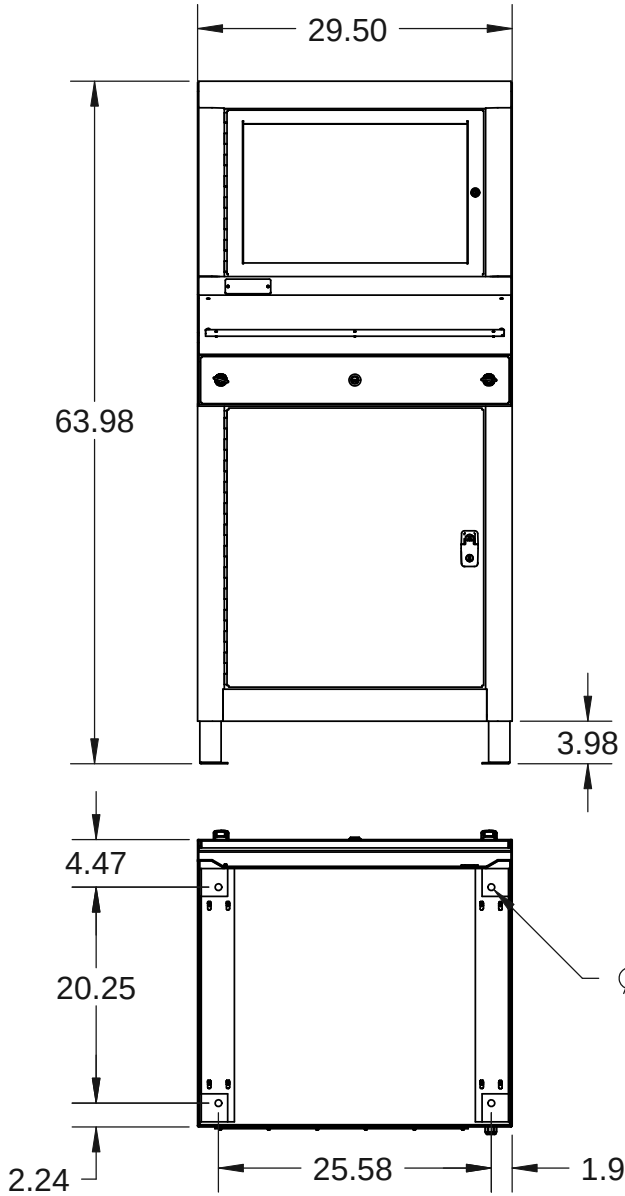

Floor Bolt Pattern

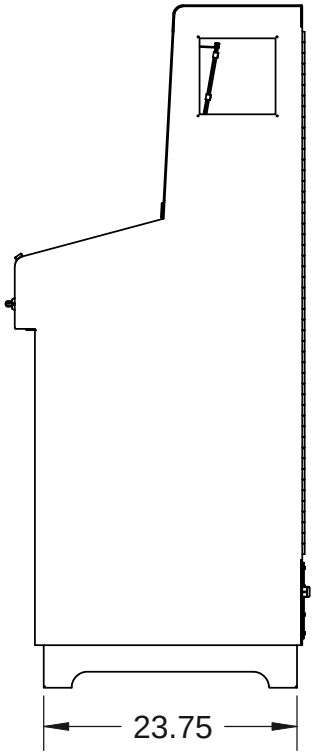

(Enclosure shown for reference only)

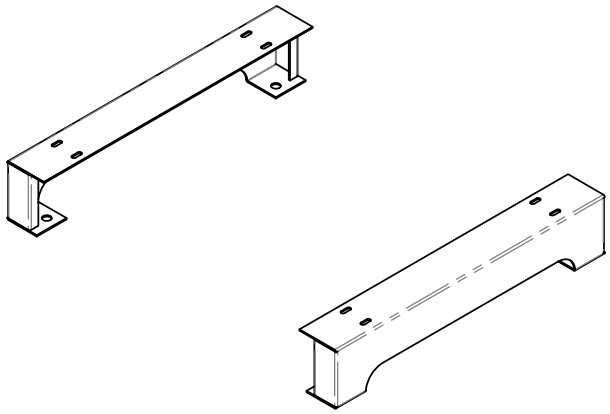

TITAN Support Legs