ITSENCLOSURES
271 Westech Drive, Mt. Pleasant, PA 15666
1-800-423-9911 ◆ info@itsenclosures.com

model IP152621-12-x

PC Enclosure, 15" NEMA-12

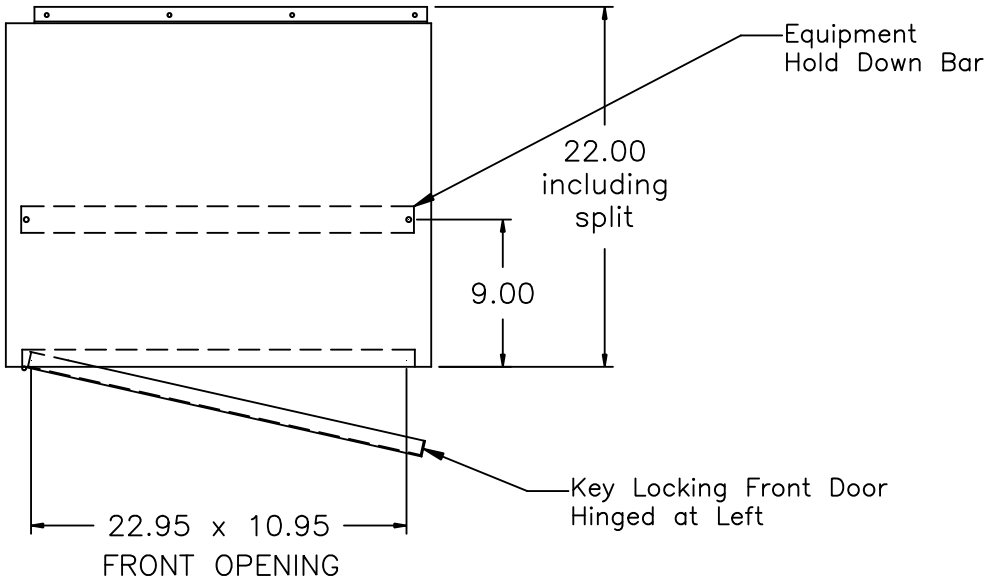

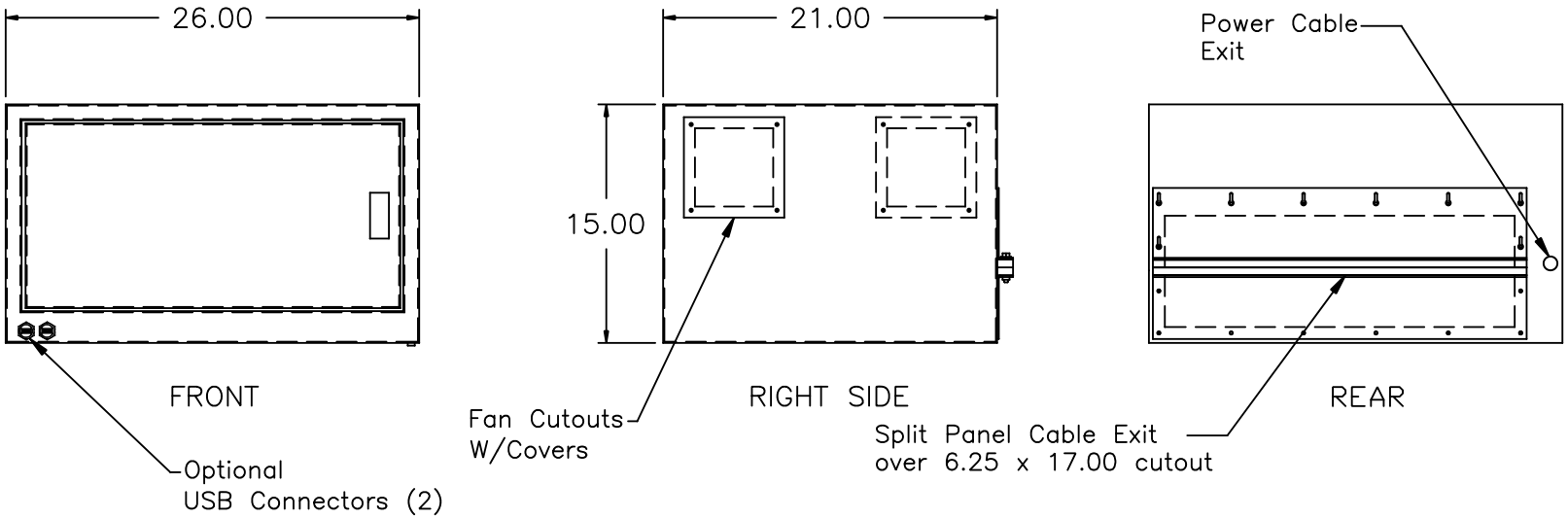

STANDARD PRODUCT DATA SHEET
Dimensions are in inches. Specifications are subject to change without notice.

ITSENCLOSURES.com